Animation Platter V4

This project is inspired by zoatropes.

A NEMA17 stepper motor or BLDC motor is used to spin an animation platter. Above the animation platter is an array of many bright LEDs. the LEDs provide the "stroboscopic effect" by strobing the lights at a frequency predetermined by the frame count of the animation platter. The strobe can be regular or irregular in sync with the physical features and rotation speed of the animation platter. This creates the illusion of 3D animation/motion.

The BLDC motor is driven with a standard hobby grade BLDC driver. The ESC must be able to spin the motor both directions. The communicaiton output is PWM. Using a BLDC motor allows for much higher speeds. The communcation interface is 5V. Motor voltage is 12V

The NEMA17 is driven by a TMC2209 silent stepper driver. The driver is controlled through GPIO pins only. The GPIO can be driven by using timers for smooth operation. Physical gearing of the stepper motor can enable achieving higher RPMs. The GPIO, with exception of the step pin, is driven by an I2C I/O expansion chip.

The standard strobe LEDs are driven by a mosfet. The output connector is supplied with +12V supplied by VR1. There is also a neopixel output that can be used for the strobe lights. The connector extends the neopixel line that already exists on the PCB.

The primary microcontroller is a STM32F446RET. There are two secondary microcontrollers. One for each AMOLED screen. Each AMOLED screen is driven by an ESP32 microcontroller. Between each ESP32 and the STM32 is a dedicated UART line. The ESP 32 microcontrollers have built-in RTC and IMUs. They also have breakout interfaces for aditional sensors if desired in the future. The ESP32 addition offloads graphics processing and driving and allows the STM32 to be dedicated to zoetrope functions.

Interfacing with the system is done with three toggle switches, an encoder with a button, a potentiometer and two button. The AMOLED displays support touch input. There is an additional I/O expansion chip for unplanned I/O additions. Status is indicated with four NeoPixel LEDs, two full-color AMOLED displays, and three SMD LEDs for the STM32 microcontroller, red, green and blue

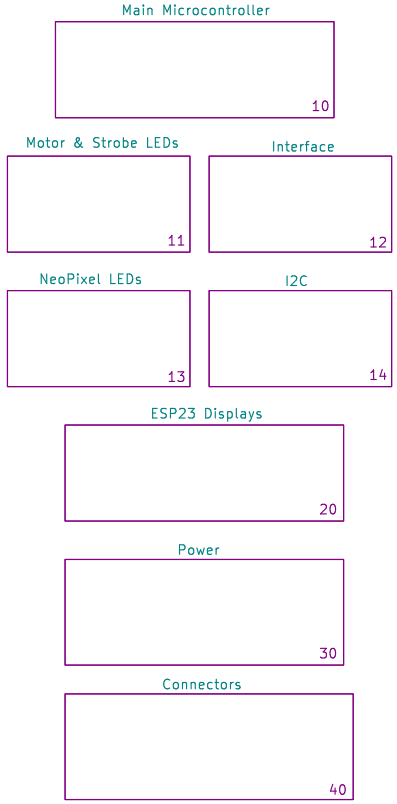

Sheet: /
File: Animation Platter_V4.kicad_sch

Title:

Size: A4	Date:	**Rev:**
KiCad E.D.A. 9.0.6		Id: 1/9

STM32F446RET Processor ARM M4
512 kB Flash, 128 RAM, 180MHz

GPIO, PC0, input interupt	hall_sensor_1
GPIO, PC1, input interupt	hall_sensor_2
GPIO, PC2, input interupt	hall_sensor_3
GPIO, PC3, input interupt	hall_sensor_4
uart2	TMC2209 uart
uart4	main ESP32 AMOLED
uart5	circular ESP32 AMOLED
I2C1	multiple devices
adc1, PA0	potentiometer
GPIO, PC5, input interupt	IO_interupt
GPIO, PC4, input interupt	IO_interupt2
GPIO, PC13, input interupt	IO_interupt3
TIMx	neopixels
TIMx	motor_stp_pwm
TIMx	BLDC_signal
TIMx	strobe_out
TIM2	encoder
GPIO, PC8, output	testLED
GPIO, PC7, output	testLED2
GPIO, PC6, output	testLED3

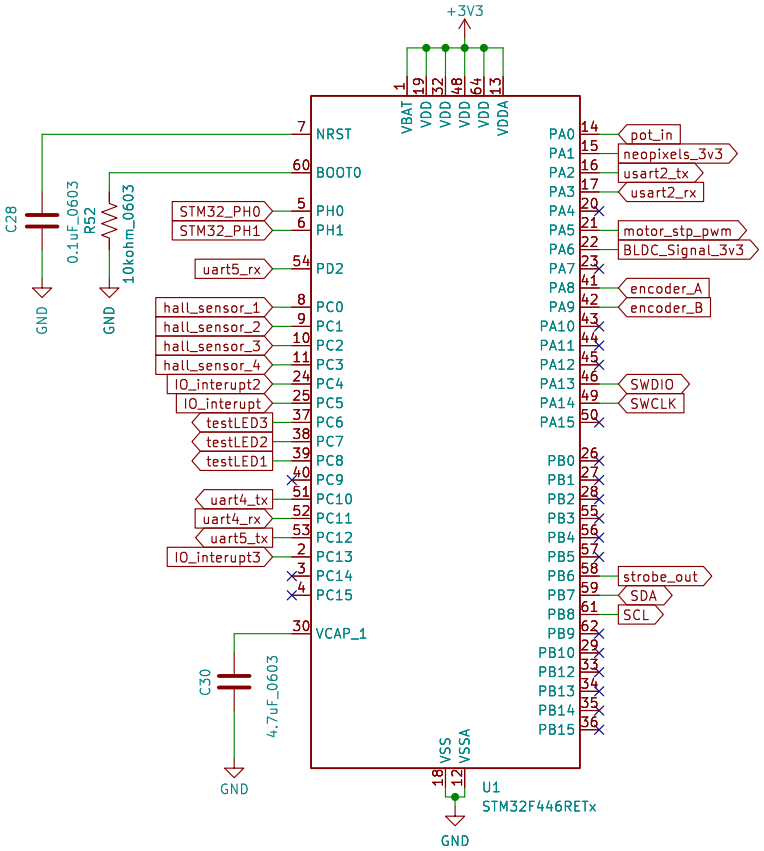

Programming Header

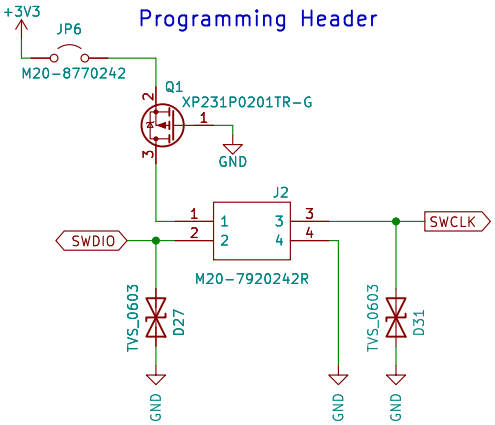

Main Crystal

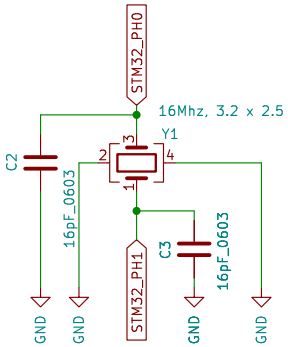

MCU LEDs

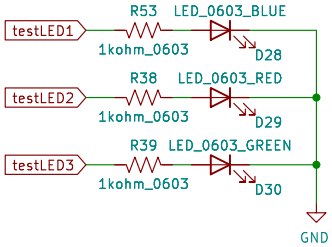

STM32 Bypass Caps

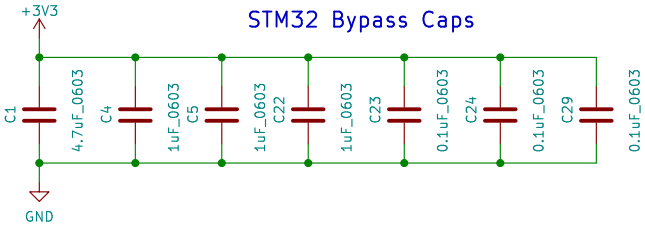

Sheet: /Main Microcontroller/
File: Microcontroller.kicad_sch

Title:

Size: A4	Date:	**Rev:**
KiCad E.D.A. 9.0.6		Id: 10/9

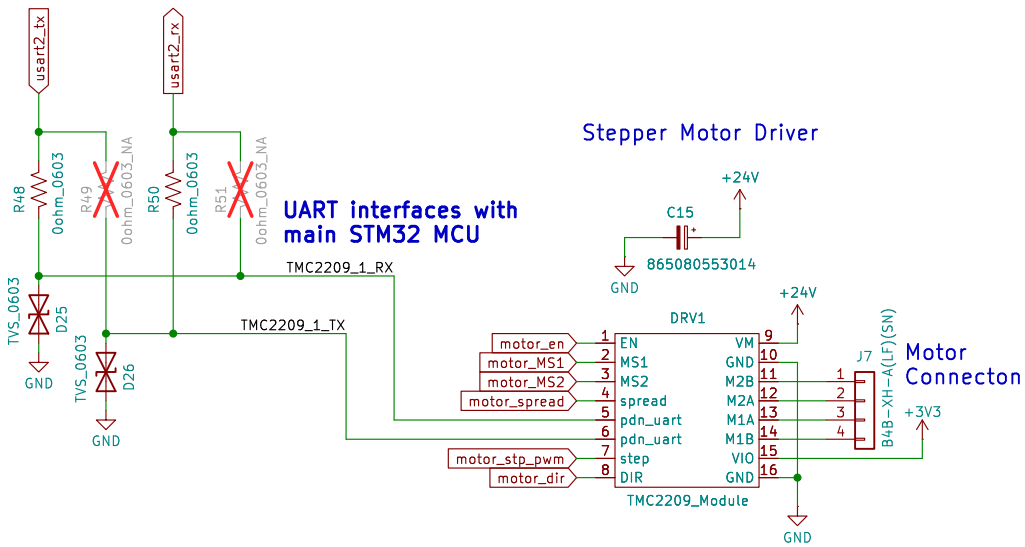

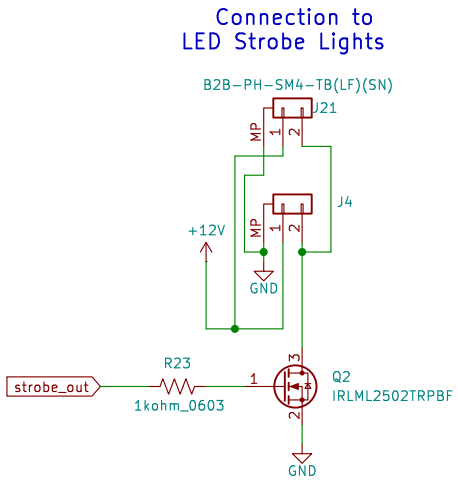

add default state resistor

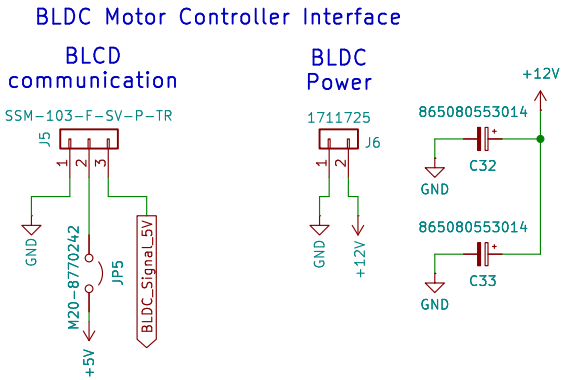

Sheet: /Motor & Strobe LEDs/
File: Motor & LEDs_sch.kicad_sch

Title:

Size: A4	Date:	Rev:
KiCad E.D.A. 9.0.6		Id: 11/9

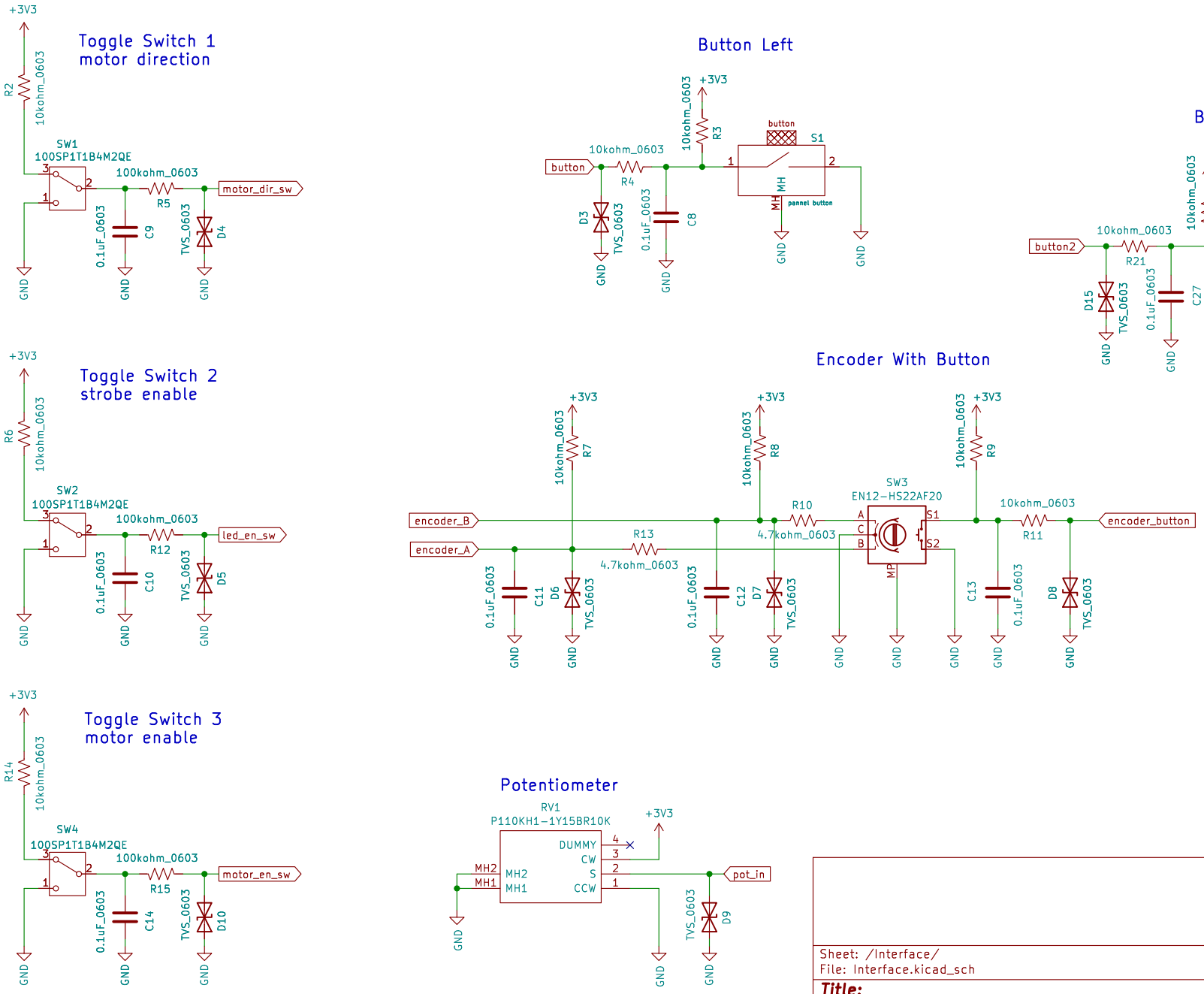

Sheet: /Interface/
File: Interface.kicad_sch

Title:

Size: A4	Date:	Rev:
KiCad E.D.A. 9.0.6		Id: 12/9

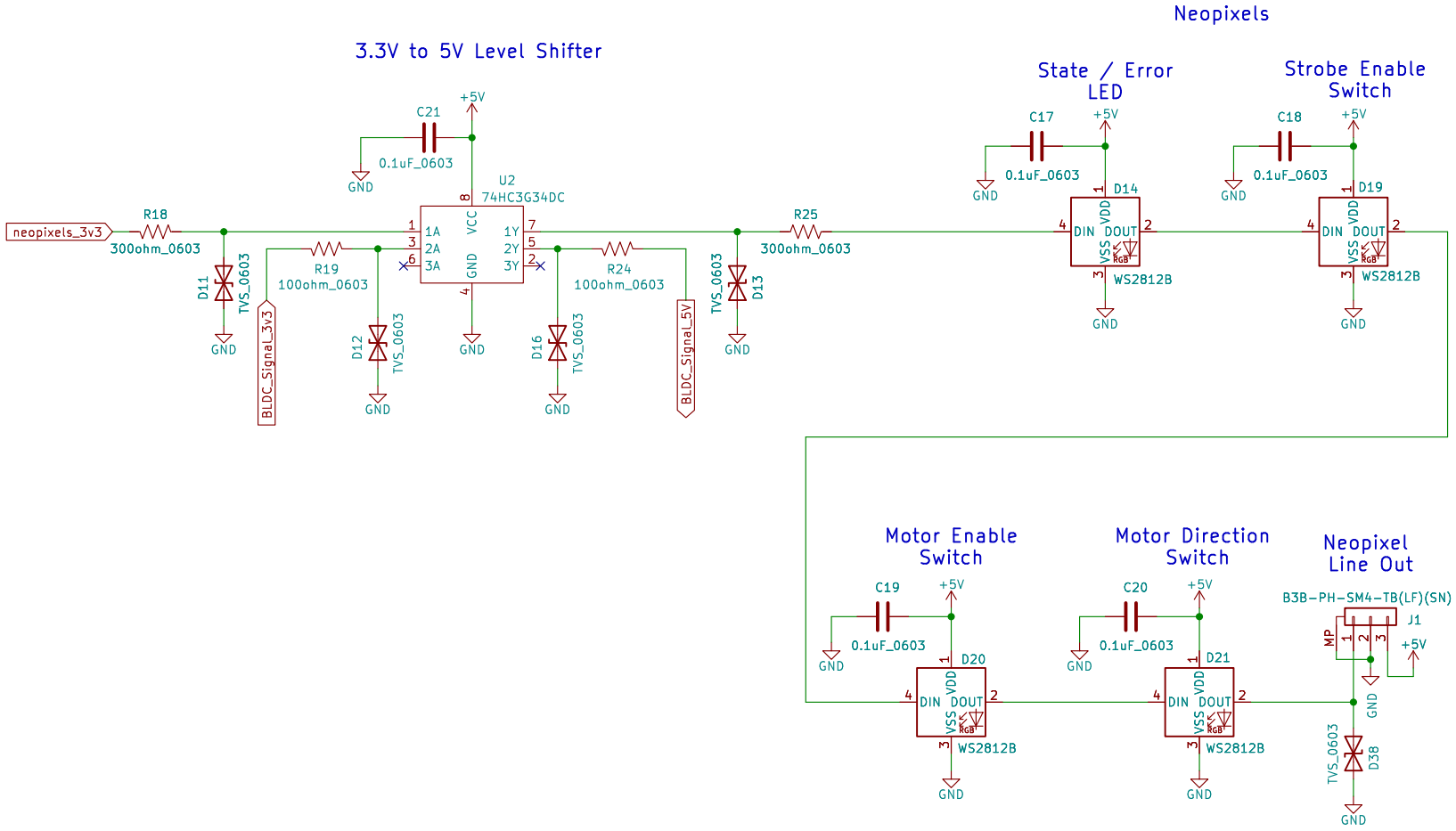

Sheet: /NeoPixel LEDs/
File: Display and LEDs.kicad_sch

Title:

Size: A4	Date:	Rev:
KiCad E.D.A. 9.0.6		Id: 13/9

Ambient Light Sensor: 0010000

I/O Expanders: 0100100
0100010
0100001

Temp Sensors: 1001000
1001001

I/O Expanders

Wrong footprint!!
I misswired the I2C Pins!

Wrong footprint!!
I misswired the I2C Pins!

Wrong footprint!!
I misswired the I2C Pins!

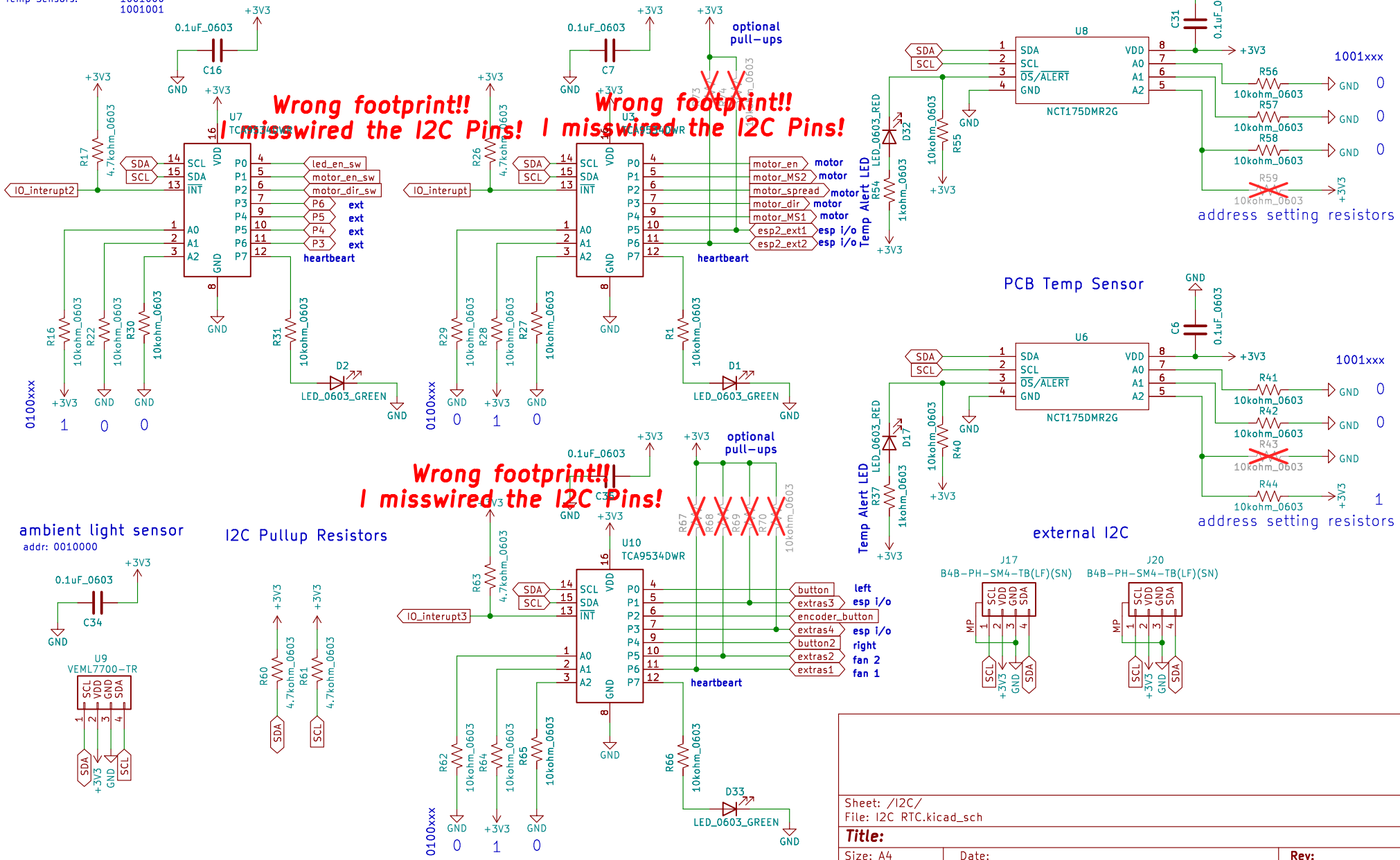

Sheet: /I2C/
File: I2C RTC.kicad_sch

Title:

Size: A4 | Date: | Rev:

KiCad E.D.A. 9.0.6 | Id: 14/9

Cutouts: USB-C

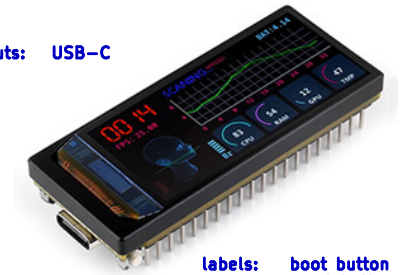

labels: boot button
reset button
CHG light

Dual Core ESP32-S3 240Mhz
1.91" AMOLED 240×536
512KB SRAM and 384KB ROM,
16MB Flash and 8MB PSRAM
QMI8658 6-axis IMU
microSD card reader
optional touch screen option
ESP32-S3-AMOLED-1.91-M

Some pins are broken out on underneath PCB via pinsockets

Ultra-low-profile USB-C cables routed underneath the PCB to power/program each ESP32

Each ESP32 Display board are mounted into the PCB via connectors. There are holes for each board's USB-C connector The USB-C Cables can either be ran to a built-in powered USB hub to get its power, or power can be supplied via the pins on the board. A diode is included on each board's input

Cutouts: USB-C
I2C
UART

labels: boot button
reset button
power light
CHG light
uSD card slot

Dual Core ESP32-S3 240Mhz
1.43" AMOLED Circular 466×466
512KB SRAM and 384KB ROM
16MB Flash and 8MB PSRAM
QMI8658 6-axis IMU
PCF85063 RTC
MicroSD card reader
Touch screen
ESP32-S3-Touch-AMOLED-1.43

UART pins broken out underneath PCB

Ultra-low-profile USB-C cables routed underneath the PCB to power/program each ESP32

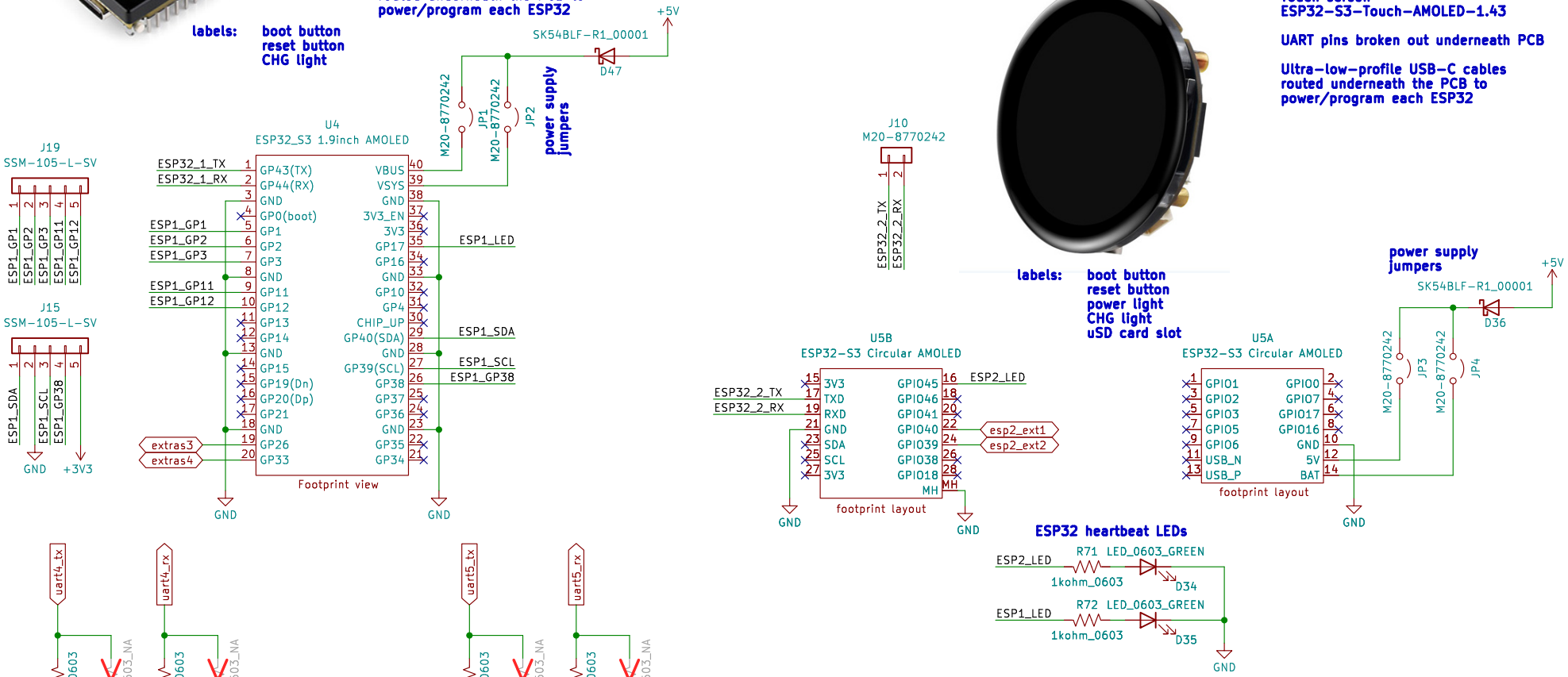

Sheet: /ESP23 Displays/
File: ESP32 Displays.kicad_sch

Title:

Size: A4	Date:	Rev:
KiCad E.D.A. 9.0.6		Id: 20/9

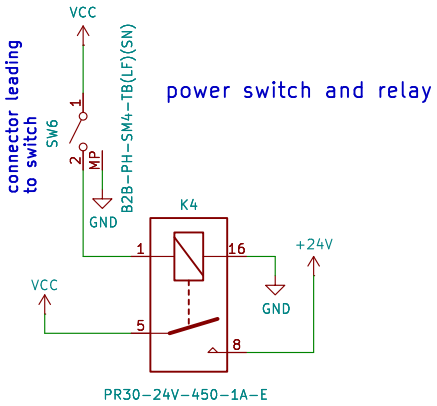

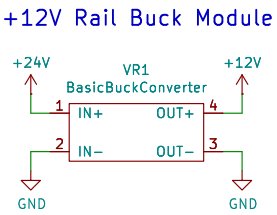

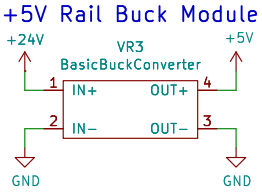

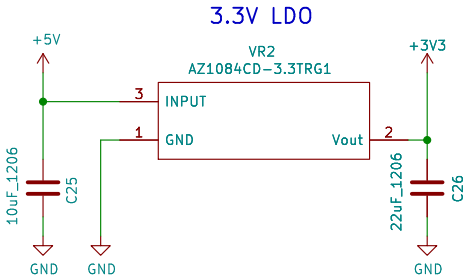

Sheet: /Power/
File: Power.kicad_sch

Title:

Size: A4	Date:	Rev:
KiCad E.D.A. 9.0.6		Id: 30/9

add optional default state resistor

add optional default state resistor

Power Connector

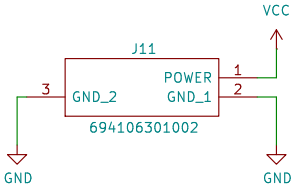

5V output USB Hub

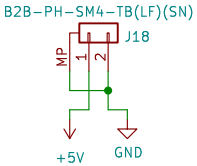

motor driver fan output

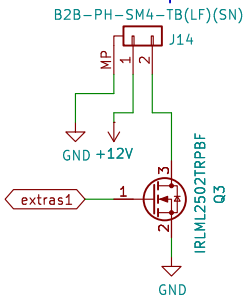

Platter Index Hall sensor

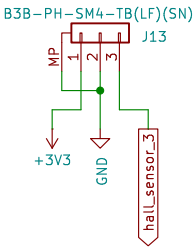

Extra Hall sensor

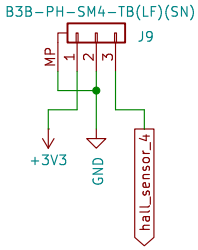

Optional Hall Sensor Pullups

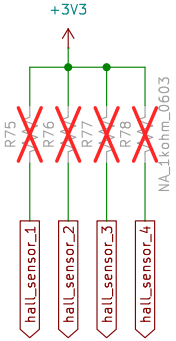

extra I/O

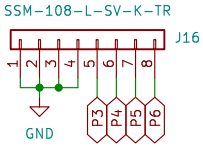

add default state resistor

motor fan output

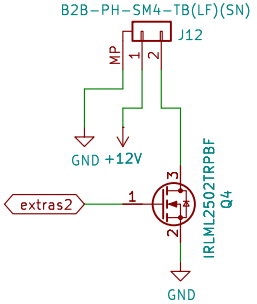

Platter RPM Hall sensor

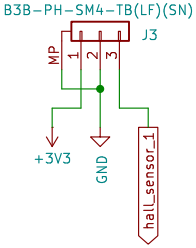

Platter ID Hall sensor

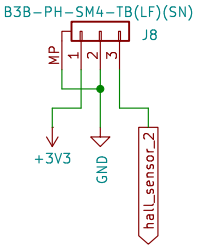

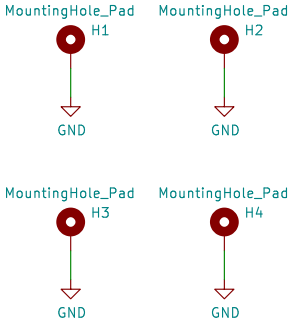

add default state resistor

Sheet: /Connectors/
File: Connectors.kicad_sch

Title:

Size: A4	Date:	Rev:
KiCad E.D.A. 9.0.6		Id: 40/9